Method for Refiguring Pump Performance from Tested Data

COPY COMPLIANT to the original document resident on the computer system at the time of printing

Summary

1 Purpose. 3

2 Scope. 3

3 Nomenclature. 3

4 Definition of Pump Specific Speed and Suction Specific Speed 5

5 General procedure for scaling and trimming 6

6 RULES FOR REFIGURING HEAD AND CAPACITY WITH SCALING AND TRIMMING 8

6.1 Affinity laws with rotational speed, f(n). 8

6.2 Affinity laws with size factor f(F). 8

6.3 Affinity laws with rotational speed and size factor, f(n, F) 9

6.4 Curve correction with impeller trim, f(T) 9

6.5 Curve correction with viscosity change, f(v) 11

6.6 Curve correction with density change, f(ρ) 13

7 RULES FOR REFIGURING NPSH WITH SCALING AND TRIMMING 13

7.1 NPSH correction with scaling, f(n, D, v) 13

7.2 NPSH correction with impeller trim, f(T) 14

7.3 NPSH correction with viscosity change, f(v) 14

8 RULES FOR REFIGURING EFFICIENCY WITH SCALING AND TRIMMING 15

8.1 Efficiency correction with scaling, f(n, D, v) 15

8.2 Efficiency correction with impeller trim, f(T) 17

8.3 Efficiency correction with viscosity change, f(v) 17

9 Conclusion 18

10 References 20

COPY COMPLIANT to the original document resident on the computer system at the time of printing

1 Purpose.

The procedure is aimed:

To introduce a general approach to refigure the performance curves based on affinity laws and impeller trim starting from tested data.

To give accurate guidance on expected performance modification such as:

- Affinity laws with rotational speed, f(n)
- Affinity laws with size, f(F)
- Affinity laws with rotational speed and size, f(n, F)
- Curve correction with viscosity f(v)
- Efficiency and NPSH correction with scaling, f(n, D)

2 Scope.

This procedure covers the evaluation of the expected performance by scaling a centrifugal pump geometry according to the affinity laws or due to impeller trimming.

The document is applicable to all centrifugal pumps.

3 Nomenclature.

The nomenclature used on this document is defined in the table below.

Name	SI unit	US unit	Description
A	m^2	$Inch^2$	Area
D2 or D2m	mm	Inch	Averaged value of the Outer Impeller Diameter
b2	mm	Inch	Impeller outlet width; if double-entry, per impeller side

COPY COMPLIANT to the original document resident on the computer system at the time of printing

D1	mm	Inch	Impeller inlet diameter
dn	mm	Inch	Hub diameter
n	rpm	rpm	Rotational speed (revolution per minute)
$n_q - n_s$	rpm, m^3/s, m	rpm, GPM, ft	specific speed
$sss - Nss$	rpm, m^3/s, m	rpm, GPM, ft	suction specific speed
Q	m^3/h	GPM	Volumetric flow rate
Q_{imp}	m^3/h	GPM	Volumetric flow rate through impeller
H	m	ft	Head per stage
H_{imp}	m	ft	Impeller head
H_{tot}	m	ft	Total head of a multistage pump
η	%	%	Pump Efficiency
P	kW	HP	Absorbed power
NPSH	m	ft	Net Positive Suction Head
ρ	kg/m^3	lb/ft^3	Density
g	m/s^2	ft/s^2	Acceleration of gravity
v	cSt	ft^2/s	Kinematic viscosity
F			Size scaling coefficient
T			Trim scaling coefficient

The average value of the external diameter D2m is defined as:

$$D2_m = \sqrt{\frac{D2_t^2 + D2_h^2}{2}}$$

COPY COMPLIANT to the original document resident on the computer system at the time of printing

Eq. 1

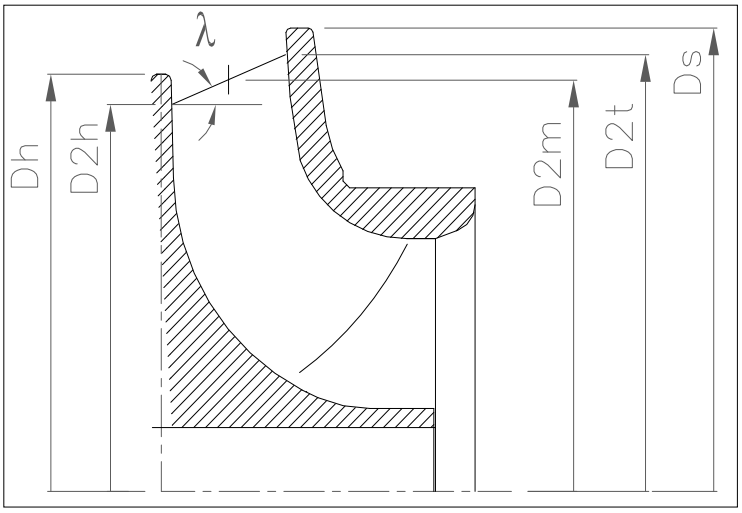

4 Definition of Pump Specific Speed and Suction Specific Speed

Pump specific speed, nq – ns, is a specific number related to the performance of the pump at best efficiency point (BEP) with maximum impeller diameter and single stage only. As specific speed can be calculated in any consistent units, it is useful to convert the calculated number to some other system of units.

For multistage pumps the head per stage shall be used, and for double-entry impellers the volumetric flow rate per impeller eye.

The related formula is:

SI units	US units
$n_q = \frac{n}{60} * \frac{(Q/f_{suct})^{0.5}}{H^{0.75}}$	$n_s = n * \frac{(Q * f_{suct})^{0.5}}{H^{0.75}}$
n: rotation speed of the rotor in rpm Q: flowrate at best efficiency point	n: rotation speed of the rotor in rpm Q: flowrate at best efficiency point

COPY COMPLIANT to the original document resident on the computer system at the time of printing

(BEP) in m3/h fsuct: number of impeller suctions H: head per stage in m	(BEP) in GPM fsuct: number of impeller suctions H: head per stage in ft
$n_q=n_s/51.64$	$n_s=n_q*51.64$

Suction specific speed, SSS – Nss, is a specific number related to the suction performance of the pump at best efficiency point (BEP) and it is calculated by the same formula as pump specific speed but uses NPSH values in place of head. To. It is defined by the following formulations:

SI units	US units
$sss = \frac{n}{60} * \frac{(Q/f_{suct})^{0.5}}{NPSH_3{}^{0.75}}$	$N_{ss} = n * \frac{(Q * f_{suct})^{0.5}}{NPSH_3{}^{0.75}}$
n=rotation speed of the rotor in rpm Q flowrate at best efficiency point (BEP) in m3/h fq: number of impeller suctions NPSH3: NPSH3% at BEP in m	n=rotation speed of the rotor in rpm Q flowrate at best efficiency point (BEP) in GPM fq: number of impeller suctions NPSH3: NPSH3% at BEP in ft
sss=Nss/51.64	Nss=sss*51.64

5 General procedure for scaling and trimming

The Affinity Laws of centrifugal pumps indicate the influence on volume capacity, head (pressure) and/or power consumption of a pump due to:

- change in **rotational speed** - revolutions per minute (RPM)
- geometrically similarity - change in **impeller diameter**

Scaling formulas require the definition of a source reference hydraulic -the model test - and a target hydraulic – the full scale test:

COPY COMPLIANT to the original document resident on the computer system at the time of printing

- the subscript M indicates the model or reference hydraulic, i.e. the machine we use as a model and from which we scale the test performance;
- the subscript A indicates the full scale, the machine we want to predict the performance.

General procedure for scaling formula is applicable to all type of centrifugal pumps, single and multistage, single or double suction, axially or radially split, in volute or diffuser, that are in hydraulic similarity to the reference hydraulic also known as affinity laws.

Pumps are in hydraulic similarity when all the hydraulic dimensions fulfill the same scale factor. The formula is not valid when one or more geometric parameters of the hydraulic surfaces differs from the selected scale factor.

F coefficient is the scaling factor of the geometry. As a rule of thumb, it is referred to the ratio of the impeller inlet diameter:

$$F = \frac{D1_A}{D1_M}$$

Eq. 2

In some cases, also the ratio of the impeller external diameter of the full scale to the model scale pump ($D2_A/D2_M$) is accepted but the first criteria should be preferred, mainly to avoid inaccuracy when some trim has been used.

The F coefficient is based on the inlet impeller diameter D1, but it applies to all the other pump components dimensions (D1, b2, dn, D2 etc).

Couple of limitations to be considered:

- The allowed scaling coefficient F shall be within 0.5 to 5.
- The scaled external diameter $D2_A$ of the impeller shall not be lower than 250mm.

The general procedure for scaling the performance of the pump is not applicable when the scale factor exceeds these limits. In these cases, the scaled performance curve shall be estimated by R&D department with numerical analyses or other methodology.

The scaling of the geometry shall be as accurate as possible to avoid hydraulic singularity from model test to full scale pump, but little scatter is accepted if some mechanical or structural constrains are imposed without any correction on the general formulation. In principle the acceptable tolerances for the geometry are related to Manufacturing Quality classes industrially used for impellers, diffusers and volute casings that, due to their complicated forms, are manufactured by various casting methods. Frequently cast components exhibit considerable

COPY COMPLIANT to the original document resident on the computer system at the time of printing

dimensional deviations from the design according to the drawing. For example, referring to Medium Quality class (G2) the tolerances for the geometry are indicated below:

- Impeller dimensions: < ± 2.5%
- Impeller outlet angles: < ± 4%
- Impeller inlet angles < ± 1%
- Casing throat area: < ± 5%
- Casing inlet angles< ± 1%
- Casing dimensions: < ± 5%
- Casing inlet or outlet nozzle: < ± 5%

6 RULES FOR REFIGURING HEAD AND CAPACITY WITH SCALING AND TRIMMING

6.1 Affinity laws with rotational speed, f(n).

The following equations define the criteria to be used to scale the head and the flowrate of a model scale pump when a different motor speed is applied, based on affinity law applications:

$$Q_A = Q_M \frac{n_A}{n_M}$$

Eq. 3

$$H_A = H_M \left(\frac{n_A}{n_M}\right)^2$$

Eq. 4

6.2 Affinity laws with size factor f(F).

The following equations shall be applied to scale the head and the flowrate of a model pump when a geometric scale factor F is applied. F shall be in the range defined in Section 5. The equation derives from the application of the affinity laws.

$$Q_A = Q_M (F)^3$$

Eq. 5

COPY COMPLIANT to the original document resident on the computer system at the time of printing

$$H_A = H_M (F)^2$$

Eq. 6

6.3 Affinity laws with rotational speed and size factor, f(n, F)

The combination of the scaling effect described in 6 and 6.2 is allowed. The equations to be applied when scaling a model pump either with new speed of rotor n, either with new geometric scale factor F are shown below.

$$Q_A = Q_M \frac{n_A}{n_M} (F)^3$$

Eq. 7

$$H_A = H_M \left(\frac{n_A}{n_M}\right)^2 (F)^2$$

Eq. 8

6.4 Curve correction with impeller trim, f(T)

To trim the external diameter of the impeller is a well-known practice to decrease the hydraulic performance of a pump. While trimming the performance curve of the pumps move to lower head and flowrates, the best efficiency point shift toward low capacities and efficiency decrease as well. It is governed by the trimming factor T and by some exponents usually called mq and mh.

The trimming factor T is defined as the ratio between D2m at maximum diameter and D2m trimmed.

$$T = \frac{\text{D2m at maximum diameter}}{\text{D2m trimmed}}$$

Eq. 9

Even if there are several ways to trim the impeller in this document only the trimming formulas for a trimming parallel to the D2m at maximum diameter will be presented. The equations below are not applicable if a different trimming mode is used.

The trimming coefficient T is constrained by both the minimum value of the external diameter that can machined on a pump and by the maximum allowed reduction of efficiency of the pump. As

COPY COMPLIANT to the original document resident on the computer system at the time of printing

a rule of thumb there are two main factors that drive this parameter: the specific speed of the pump and the type of pump.

A correlation between specific speed and the minimum value of trimming the external diameter of the pump has been established and is regulated by the equations below.

- For BB4 or BB5 type pumps or all other type pumps with Nq>160:

$$\frac{Dmin}{Dmax} = 0.93$$

Eq. 10

- For all other pump types with Nq<160:

$$\frac{Dmin}{Dmax} = 0.733848314 + 0.00279138 * N_q - 0.00000883 * N_q^2$$

Eq. 11

A graphical representation of the definition of the maximum trimming value is shown in the following chart, expect for BB4 or BB5 type pumps.

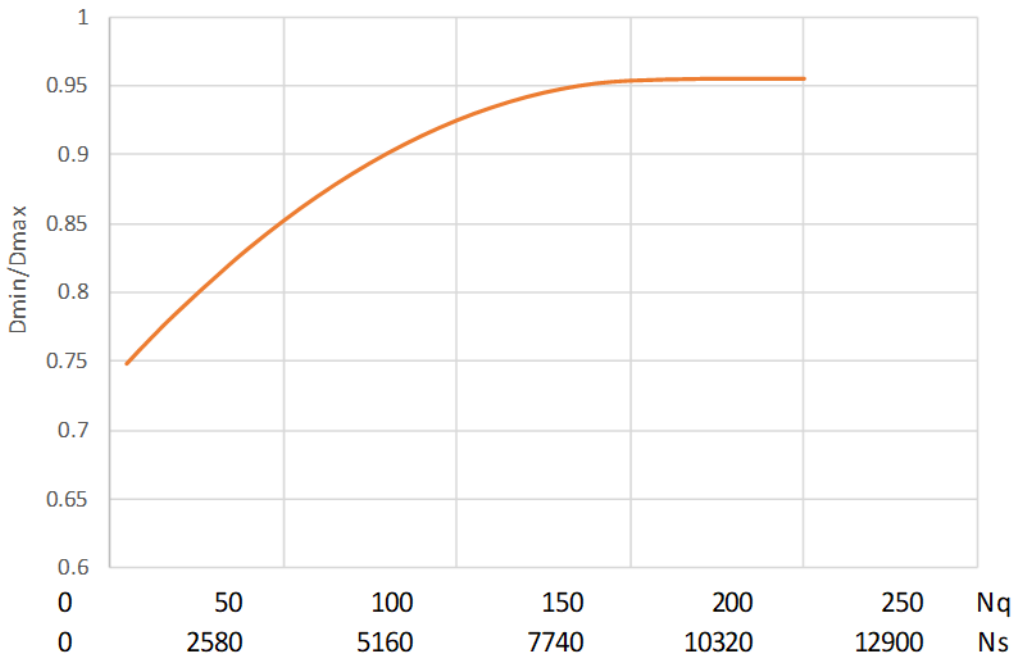

Figure 6-1. Suggested Dmin/Dmax ratio

The following equations defines the criteria to be used to scale the head and the flowrate of a model scale pump when a trim of the external diameter of the impeller is applied.

COPY COMPLIANT to the original document resident on the computer system at the time of printing

$$Q_A = Q_M(T)^{m_Q}$$

Eq. 12

$$H_A = H_M(T)^{m_H}$$

Eq. 13

Where exponents m_Q and m_H may assume different values based on the type of machine, its nq and others factor. In [1] page 200, the following law is suggested to calculate m_Q and m_H:

$$m_Q = m_H = m = 2.08 + 1.1 * e^{(15 * (T - 1))}$$

Eq. 14

It's also suggested that m depends on the impeller beta distribution at the outlet: if blades are under-filed at the outlet, m is closer to 3 for trims smaller than the profile length. If trimming exceeds 5% of impeller outlet diameter, m is near 2. If on the impeller beta and b2 do not change with the radius, in theory m=2 may be used.

For existing pumps the exponents m_Q and m_H are defined basing on experimental test and the use of those values is highly recommended.

6.5 Curve correction with viscosity change, f(v)

The scaling law with viscosity applied by the company are following [3]. It's applicable for fluid with kinematic viscosity lower than 4000cSt and shall be determined by following the step below.

- Calculation of parameter B by using the formula:

$$B = 16.5 * \frac{\upsilon_A^{0.5} * (H_{BEP-W})^{0.0625}}{(Q_{BEP-W})^{0.375} * n^{0.25}}$$

for SI units

Eq. 15

$$B = 26.6 * \frac{\upsilon_A^{0.5} * (H_{BEP-W})^{0.0625}}{(Q_{BEP-W})^{0.375} * n^{0.25}}$$

for US units

Eq. 16

COPY COMPLIANT to the original document resident on the computer system at the time of printing

- Calculation of the corrective coefficients:
  - If $B \leq 1$

$$H_{vis} = H_w$$

Eq. 17

$$Q_{vis} = Q_w$$

Eq. 18

  - If $1 < B < 40$

$$C_Q = 2.71^{-0.165 * (\log_{10} B)^{3.15}}$$

Eq. 19

$$Q_{vis} = C_Q - Q_W$$

Eq. 20

$$C_{BEP-H} = C_Q$$

Eq. 21

$$H_{BEP-vis} = C_{BEP-H} * H_{BEP-W}$$

Eq. 22

$$C_H = 1 - \left[\left(1 - C_{BEP-H}\right) * \left(\frac{Q_W}{Q_{BEP-W}} \right)^{0.75} \right]$$

Eq. 23

$$H_{vis} = C_H * H_W$$

Eq. 24

A graphical representation of Ch and Cq factors is shown in the figure below:

COPY COMPLIANT to the original document resident on the computer system at the time of printing

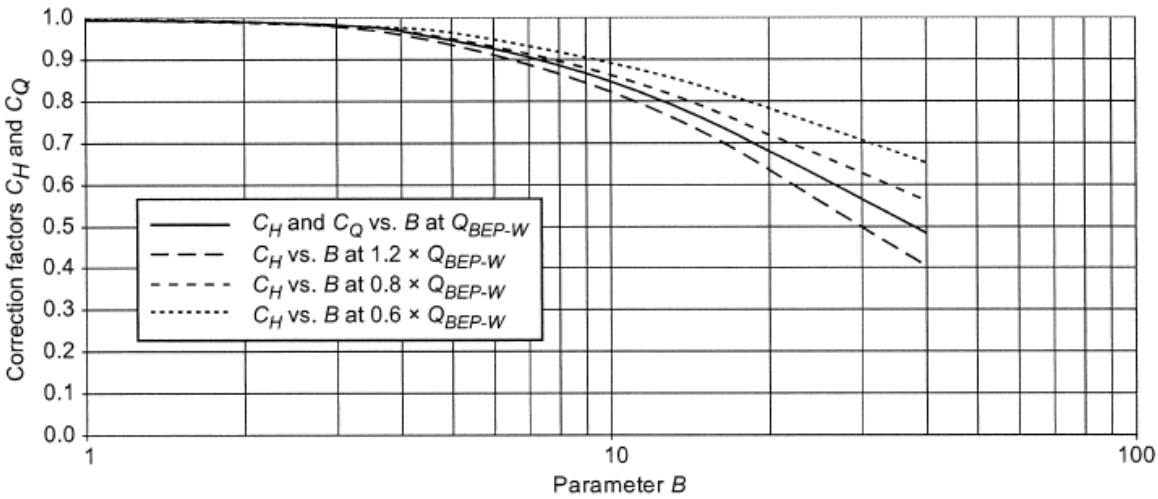

Figure 6-2. Correction factors distribution, Ref. [3] , Figure 9.6.7.4.5a

6.6 Curve correction with density change, f(ρ)

Density only affects power absorbed from the rotor. Usually, model tests are carried out by using fresh water as pumped fluid (potable water, at 20°Celsius). Whenever the fluid density differs from the density of the fluid of the model test, a scale factor shall be applied to the power, by using the equation below:

$$P_a = P_m \frac{\rho_A}{\rho_M}$$

Eq. 25

7 RULES FOR REFIGURING NPSH WITH SCALING AND TRIMMING

7.1 NPSH correction with scaling, f(n, D, v)

Scaling rules for NPSH calculation are valid when the fluid in the full scale condition has the same characteristics of the fluid during the model test, in terms of temperature, viscosity and gas content.

As a rule of thumb when scaling down a pump in terms of size and rpm the suction capability of the pump is worsened by increased blockage of boundary layer, increased effect of the roughness. In this case the scaling exponent to be applied shall consider this aspect.

COPY COMPLIANT to the original document resident on the computer system at the time of printing

A standard equation for the estimation of the NPSH of a scaled pump is shown in the equations below:

- If $\frac{n_A}{n_M}$>1 or F>1 $\quad NPSH_A = NPSH_M\left(\frac{n_A}{n_M}\right)^2 (F)^2$

Eq. 26

- If $\frac{n_A}{n_M}$<1 or F<1 $\quad NPSH_A = NPSH_M\left(\frac{n_A}{n_M}\right)^{1.7} (F)^2$

Eq. 27

7.2 NPSH correction with impeller trim, f(T)

To trim the external diameter of the impeller, produce a blade loading redistribution that can worse the suction characteristic of the pump. This effect increases with the level of trimming.

Typically, by trimming the impeller, a shift of the NPSH curve towards lower flow rate occurs, with consequent rise of the required NPSH.

To minimize the reduction of suction capability of a multistage pump is recommended to trim the next stage impellers more than the first stage impeller.

The rules typically used to calculate the NPSH of a trimmed impeller are shown in the equation below:

$$Q_{NPSH\ A} = Q_{NPSH\ M}(T)^2$$

Eq. 28

7.3 NPSH correction with viscosity change, f(v)

Viscosity affect negatively the NPSH of the pump. The company rules for scaling the NPSH with viscosity are following the ANSI HI std [3].

The correlation shall not be applied to hydrocarbons without considerations on thermal effect (see ANSI/HI 1.3)

The following steps shall be followed for the calculation of the corrective coefficient $C_{NPSH.}$

- Calculate B as described above;
- Calculate C_H as described above;
- Calculate C_{NPSH} and $NPSH3_{vis}$ by using the following formula:

COPY COMPLIANT to the original document resident on the computer system at the time of printing

$$C_{NPSH} = 1 + A * \left(\frac{1}{C_H} - 1\right) * 274000 * \left[\frac{NPSH3_{BEP-W}}{(Q_{BEP-W})^{0.6667} * n^{1.333}}\right]$$

for SI units

Eq. 29

$$C_{NPSH} = 1 + A * \left(\frac{1}{C_H} - 1\right) * 275000 * \left[\frac{NPSH3_{BEP-W}}{(Q_{BEP-W})^{0.6667} * n^{1.333}}\right]$$

for US units

Eq. 30

A=suction coefficient =0.1 for end suction ; 0.5 for between bearing

$$NPSH3_{vis} = C_{NPSH} * NPSH3$$

Eq. 31

8 RULES FOR REFIGURING EFFICIENCY WITH SCALING AND TRIMMING

8.1 Efficiency correction with scaling, f(n, D, v)

The formulas are applicable for similar pumps, where the effect of the blockage due to the boundary layer or to the roughness are not preponderant. This is valid when scaling factors for dimensions are according to recommendations in Section 5. Scaling pumps over these limits is possible but special calculation is required.

The viscosities of the liquids pumped in the test and in operation are different because of different fluid temperatures or different fluids.

The estimation of the efficiency is based on the average between different formulas listed below.

a) **Hutton formulation**

If F>1 $$\eta_A = 1 - (1 - \eta_M) * \left[0.3 + 0.7 * (F)^{-0.4} * \left(\frac{n_A}{n_M}\right)^{-0.2} * \left(\frac{\upsilon_A}{\upsilon_M}\right)^{0.2}\right]$$

Eq. 32

COPY COMPLIANT to the original document resident on the computer system at the time of printing

If F<1 $$\eta_A = 1 - \frac{(1-\eta_M)}{\left[0.3 + 0.7 * (F)^{0.4} * \left(\frac{n_A}{n_M}\right)^{0.2} * \left(\frac{\upsilon_A}{\upsilon_M}\right)^{-0.2}\right]}$$

Eq. 33

The Hutton formula deals with internal efficiency, because it is based on the reduction of the losses related to the Re number only – hydraulic and volumetric losses. The efficiency improvement does not include changes in mechanical losses, which should be evaluated separately, and total efficiency should be corrected accordingly.

b) **Internal formulation (applicable if H<500 m)**

$$\eta_A = 1 - (1-\eta_M) * \left[(F)^{-0.15} * \left(\frac{H_A}{H_M}\right)^{-0.077}\right]$$

Eq. 34

c) **ANSI/HI [3] formulation**

$$\eta_A = 1 - \left(F^{-x} - \eta_M * F^{-x}\right)$$

Eq. 35

0<x<0.26 depending on relative surface roughness, as described in [2] at page 20. Generally x=0.26 is used.

The formula considers variations in temperature of the liquid pumped during tests and in operation, causing changes in viscosity, and the different diameters for the model and prototype pumps. The selection of coefficients should be mutually agreed between the pump manufacturer and the purchaser, and should be based on all available test data of a similar nature.

d) Karassik [4] formulation (recommended if H>500 m)

$$\eta_A = \frac{\eta_M}{\eta_M + \left((1-\eta_M) * \left(\frac{\upsilon_A}{\upsilon_M}\right)^{0.07} * \left(\frac{n_A}{n_M}\right)^{-0.17}\right)}$$

Eq. 36

This formula is not convenient for model tests. It is often used when guarantees for the prototype pump cannot be tested at full speed and operating temperature, due to test rig limitations. The increased efficiency is calculated on the basis of the measured total efficiency obtained at different speeds and temperatures, and also includes improvements for different losses which are not influenced by the Re number.

COPY COMPLIANT to the original document resident on the computer system at the time of printing

Basing on service, following approach is recommended:

- For fresh water applications the average value between a), b), c) shall be used.
- For viscous applications the worst value between a) or d) shall be used.

8.2 Efficiency correction with impeller trim, f(T)

Trimming the impeller typically generates a reduction of the efficiency of the pump due to the increase of the mixing losses between the impeller and the casing.

In some cases, little trim of the impeller causes the efficiency to increase due to the optimal interaction between mixing losses and friction losses. This effect has been noted on double suction volute pumps.

The estimation of the efficiency loss on trimming depends on the design of the hydraulic, so each hydraulic has a proper efficiency scaling formulation. The usual technique to evaluate this formulation is to define a correlation from experimental test on the model test pump carried out at different trimming level.

If no experimental data is available a first estimation of the efficiency can be expressed by means of the equation below:

- GULICH [1] formulation:

$$\eta_A = \eta_M + \varepsilon * (1 - T)$$

Eq. 37

The suggested values for ε are:

- 0.15<ε<0.25 for volute pumps;
- 0.4<ε<0.5 for diffuser pumps.

8.3 Efficiency correction with viscosity change, f(v)

The scaling law with viscosity applied by the company are in compliance with [3]. It's applicable for fluid with kinematic viscosity lower than 4000cSt and shall be determined by following the step below:

- Calculate B value as described above;
- Calculate Cμ though analytical method:

$$if B \leq 1 \quad C_\mu = 1$$

COPY COMPLIANT to the original document resident on the computer system at the time of printing

Eq. 38

$$if 1 < B < 40 \quad C_{\mu} = B^{-\left(0.0547 * B^{0.69}\right)}$$

Eq. 39

$$\mu_{vis} = \mu_W * C_{\mu}$$

Eq. 40

- Calculate Cμ -graphical method, by means of the graph below.

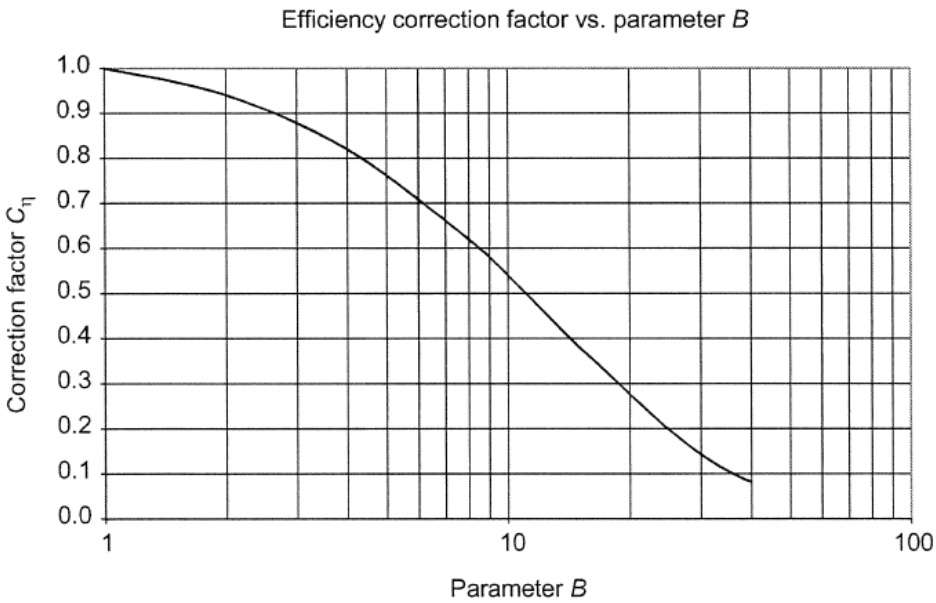

Figure 8-1 Correction factor of efficiency, [3] Figure 9.6.7.4.5b

9 Conclusion

Basically, specific speed is the prime parameter for evaluating design of centrifugal pumps, evaluating pump selections, and predicting possible field problems. It is obvious, however, that no single parameter can relate to all aspects of final pump design. Different pump specifications covering a wide variety of applications force the designer to consider additional factors that may have an unfavorable effect on pump hydraulic performance:

- Mechanical Considerations

High power/large shaft diameter

High suction pressure

Operating speed

COPY COMPLIANT to the original document resident on the computer system at the time of printing

Operating temperature

Running clearances

- Pump Liquid

Slurries

Abrasives

High viscosity

Dissolved gases

- System Considerations

NPSHA

Suction piping arrangement

Discharge piping arrangement

Shape of H-Q curve

Runout conditions

Vibration limits

In conclusion centrifugal pumps selected as models shall have reliable hydraulic performance based on accurate instrumentation. Unreliable model tests used as a basis for new development will lead to total disaster. It is strongly suggested that the selected model pump be retested to verify its hydraulic performance.

10 References

[1] Centrifugal Pumps, Fourth Edition by Johann Friedrich Gulich, Springer Nature Switzerland AG 2020

[2] Centrifugal Pumps Design & Application, by Val S. Lobanoff and Robert R. Ross, Gulf Publishing Company 1985

[3] American National Standard, ANSI HI 9.6.7 – 2010

[4] Pump Handbook Fourth ed, by I.J.Karassik, J.P.Messina, P.Cooper, C.C.Heald 2008

[5] API 610 Std 12th Ed.

COPY COMPLIANT to the original document resident on the computer system at the time of printing

COPY COMPLIANT to the original document resident on the computer system at the time of printing